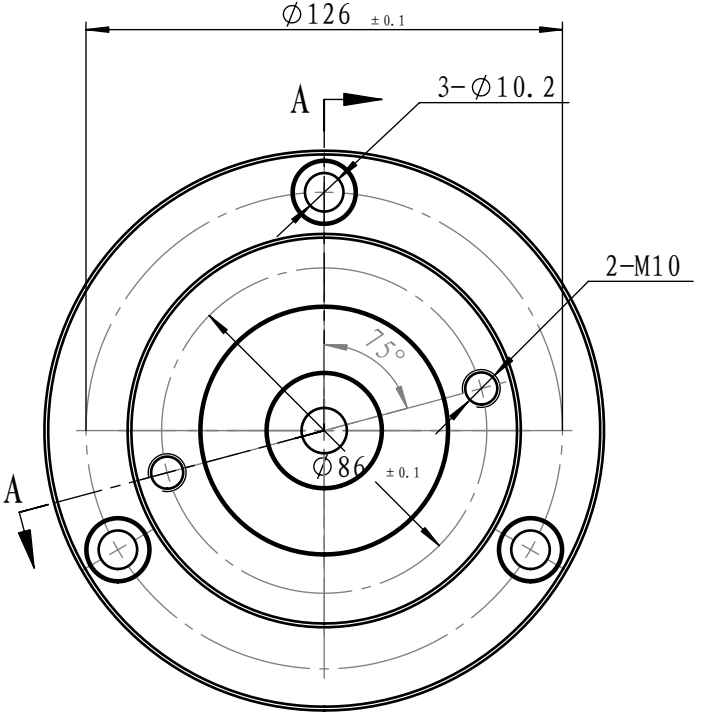
∅126 ±0.1
A
3-∅10.2
2-M10
75°
∅86 ±0.1
A

A-A

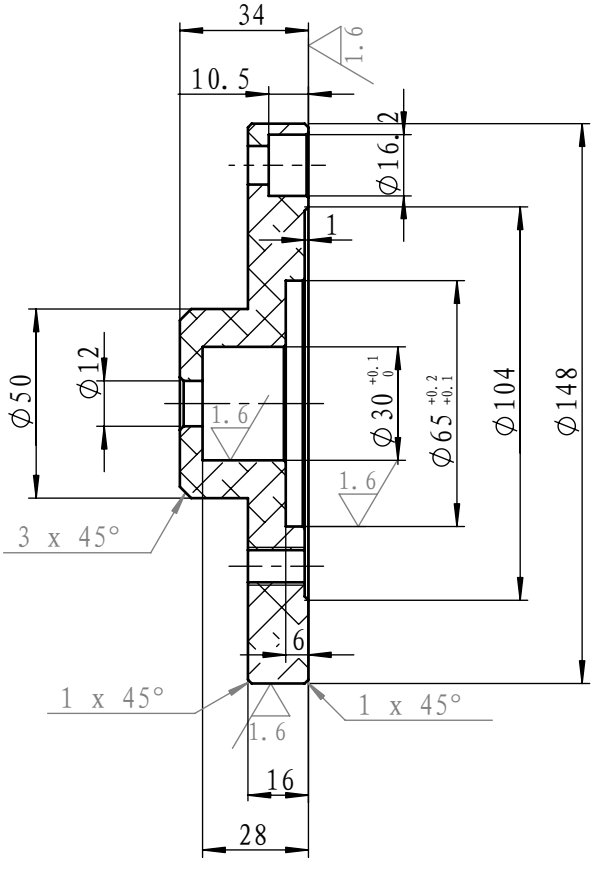
34
1.6
10.5
∅16.2
1
∅50
∅12
1.6
∅30 +0.1 0
∅65 +0.2 +0.1
∅104
∅148
1.6
3 x 45°
6
1 x 45°
1 x 45°
1.6
16
28